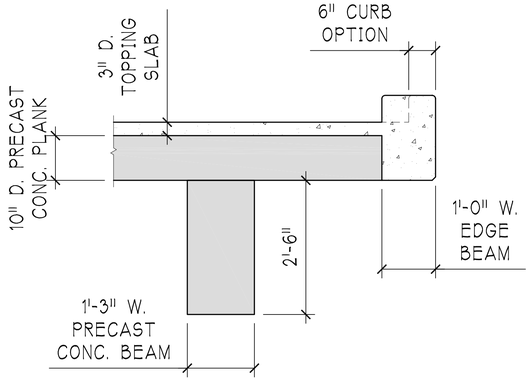

A -- EDGE SECTION

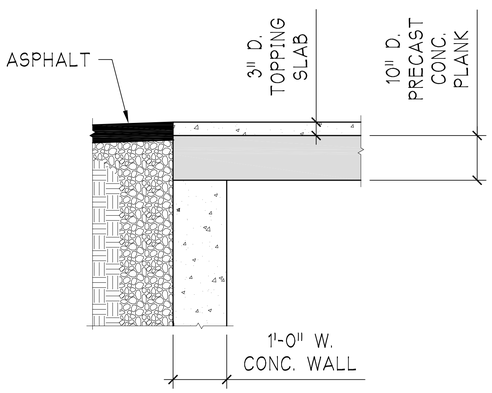

B -- WALL/PLANK SECTION

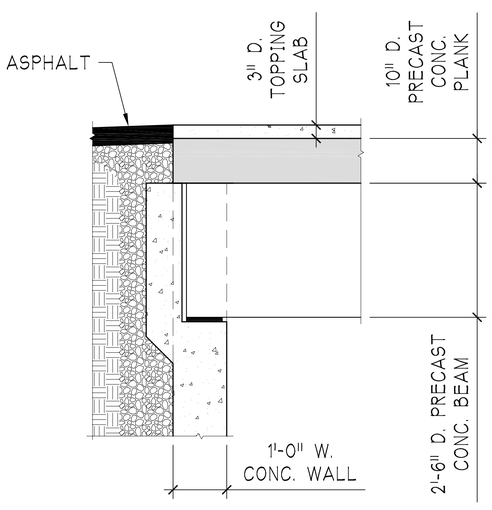

C -- WALL/BEAM SECTION

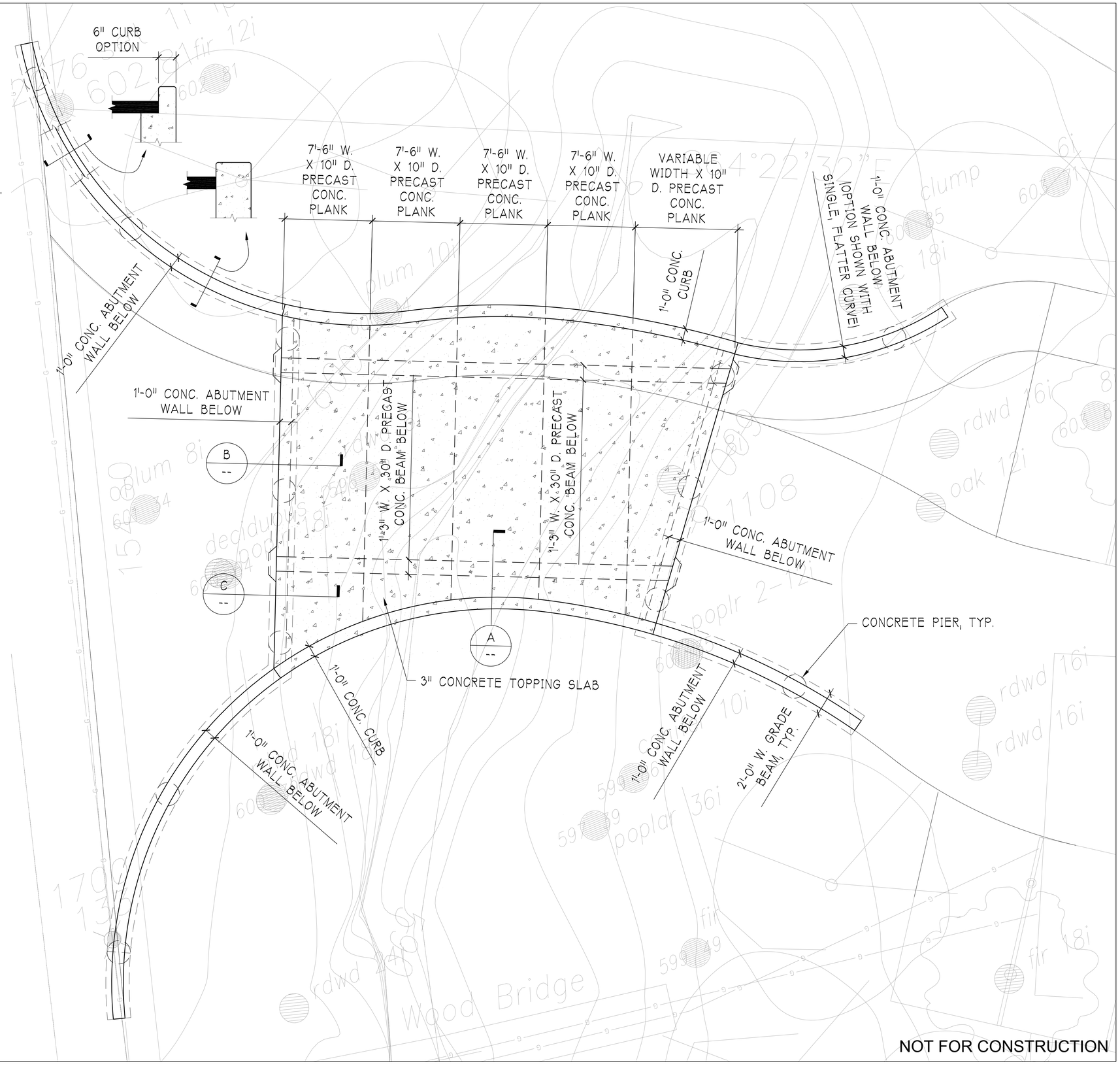

NOT FOR CONSTRUCTION

PGA design INC
LANDSCAPE ARCHITECTS
444 17th Street
Oakland CA 94612
T 510 465 1284
F 510 465 1256

Client
St Johns Episcopal Church
1707 Gouldin Road
Oakland, CA

Project Partners
Turnbull Griffin & Haesloop
Architects
817 Bancroft Way
Berkeley, CA 94710

Fratessa Forbes Wong
Structural Engineers
487 8th St.
Oakland, CA 94607

Stamp

ALL DRAWN AND WRITTEN MATERIAL APPEARING HEREIN ARE COPYWRITTEN ©, CONSTITUTE ORIGINAL AND UNPLUBLISHED WORK OF THE LANDSCAPE ARCHITECT, AND MAY NOT BE DUPLICATED, USED OR DISCLOSED WITHOUT WRITTEN CONSENT OF THE LANDSCAPE ARCHITECT.

St John's Episcopal Church
5928 Thornhill Drive
Oakland, CA

No.	Date	Description
1	11/1/06	CUP SUBMITTAL

CONCEPTUAL STRUCTURAL PLAN AND SECTIONS

Date	NOVEMBER 1, 2006
Scale	1/4" = 1'-0"
Drawn	GW
Check	MF
Sheet	

S1